Phoenix 24 x 24, C-Mount - RJ45 (Left), ix Connector (Center), FFC (Right)

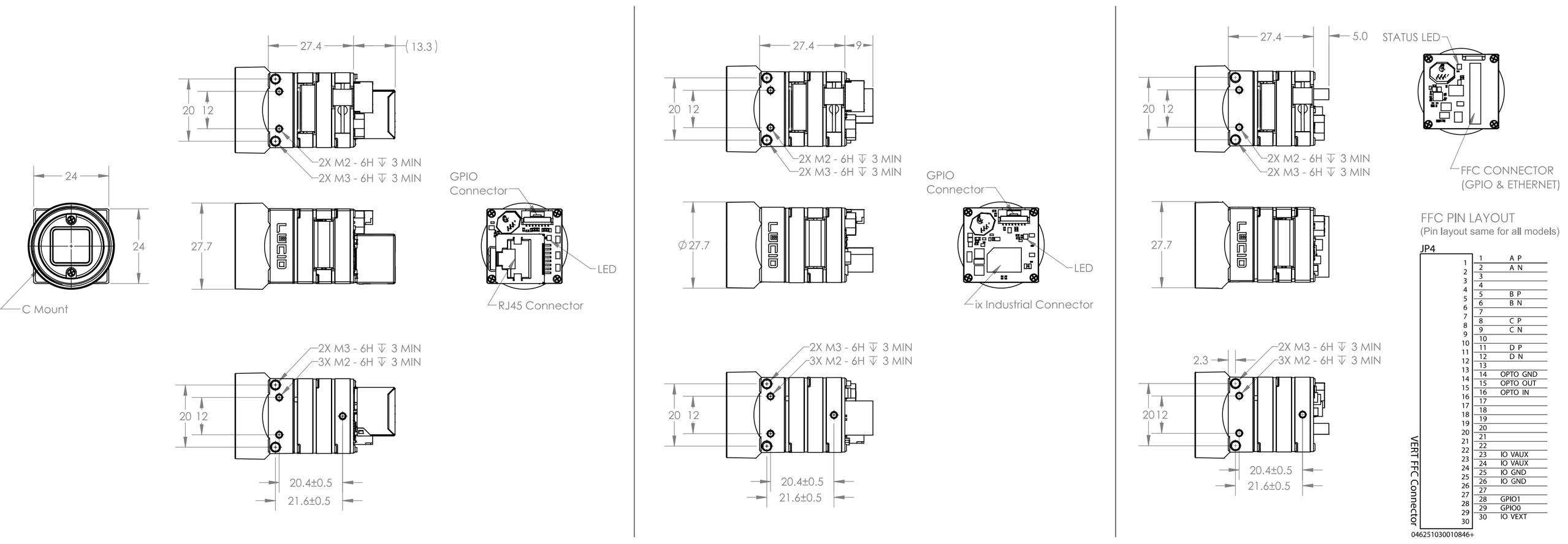

Phoenix 24 x 24, NF-Mount - RJ45 (Left), ix Connector (Center), FFC (Right)

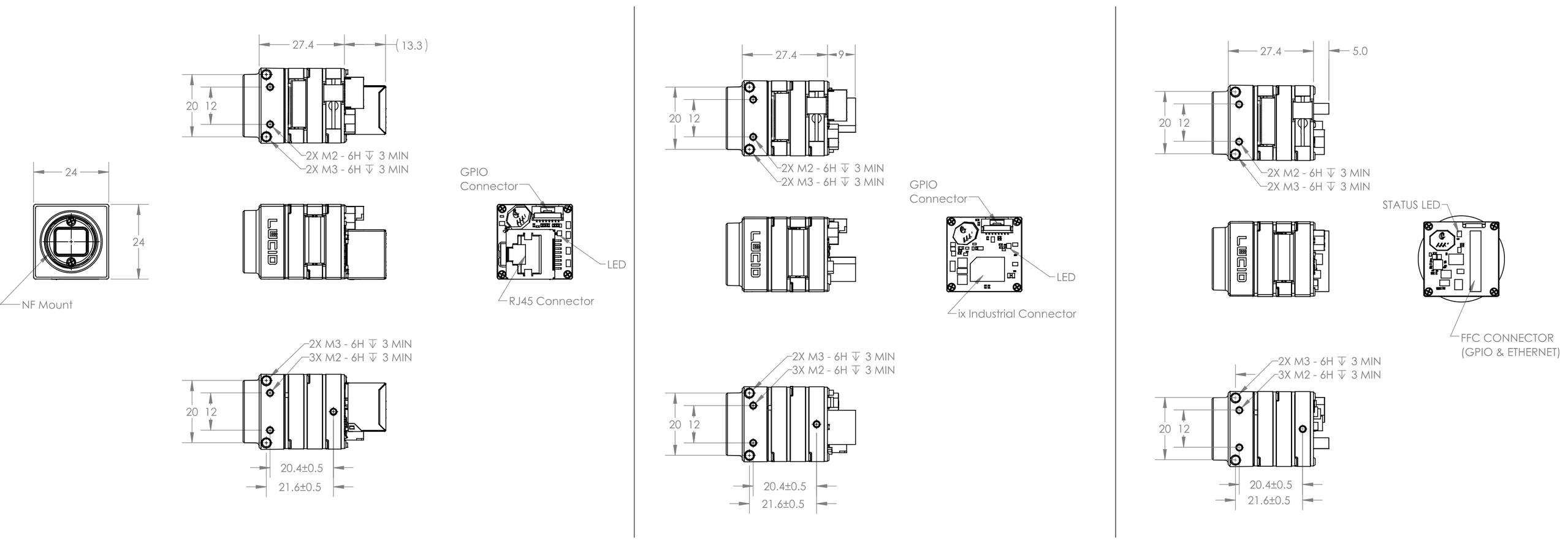

Phoenix 24 x 24, S-Mount - RJ45 (Left), ix Connector (Center), FFC (Right)

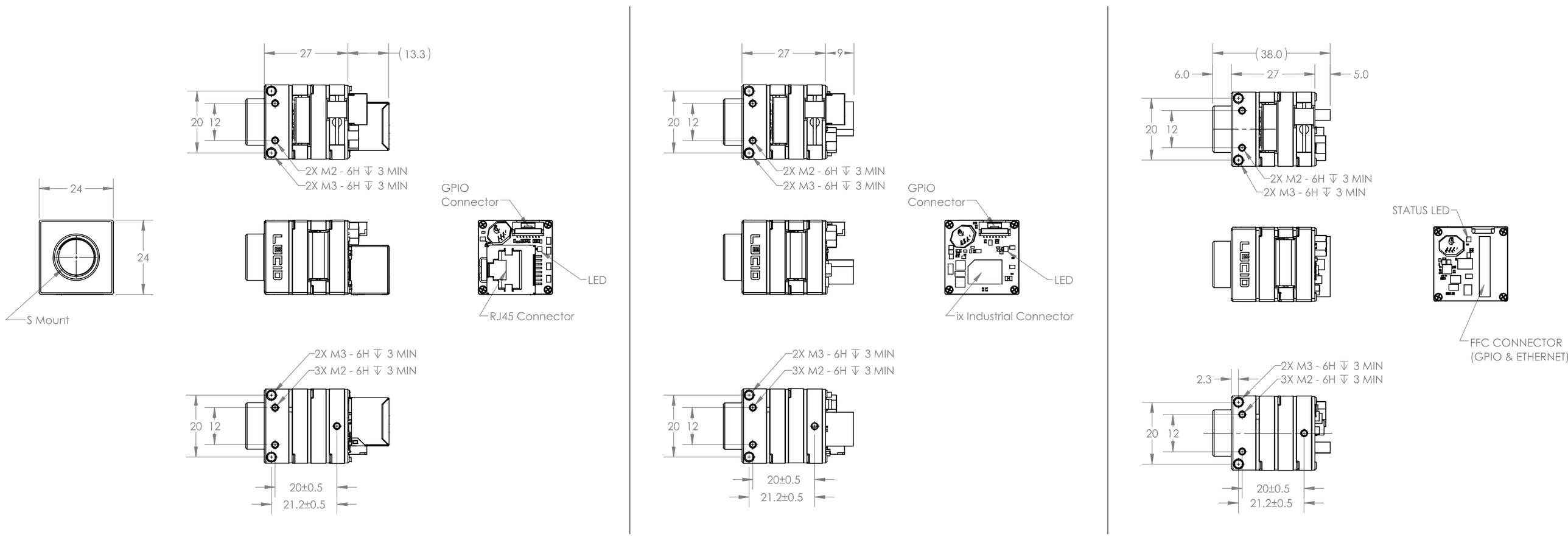

Phoenix 24 x 24, No Lens Mount - RJ45 (Left), ix Connector (Center), FFC (Right)

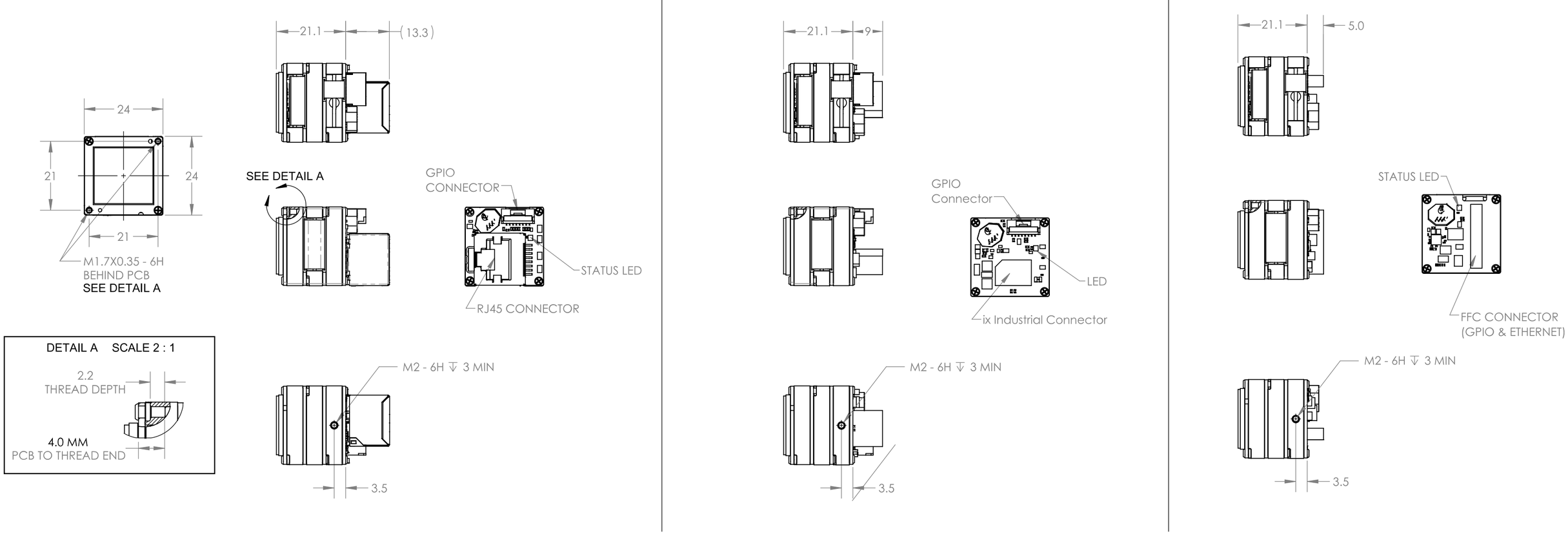
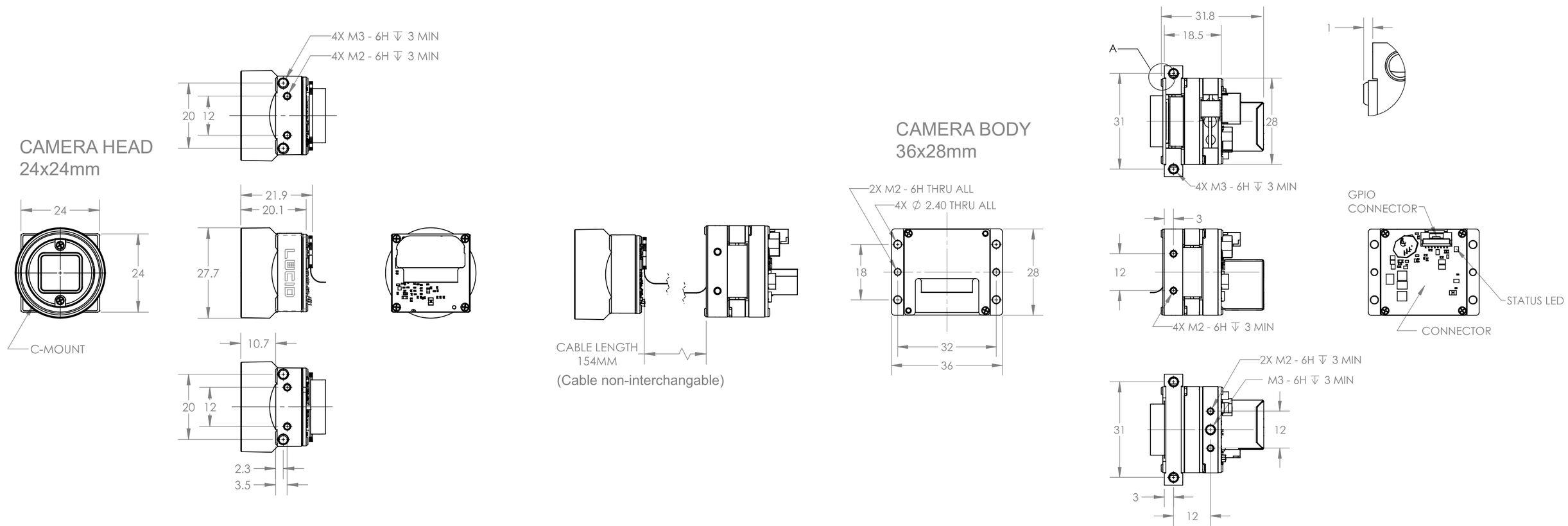
Phoenix, 24 x 24 C-Mount Extended Head (36 x 28mm Body)