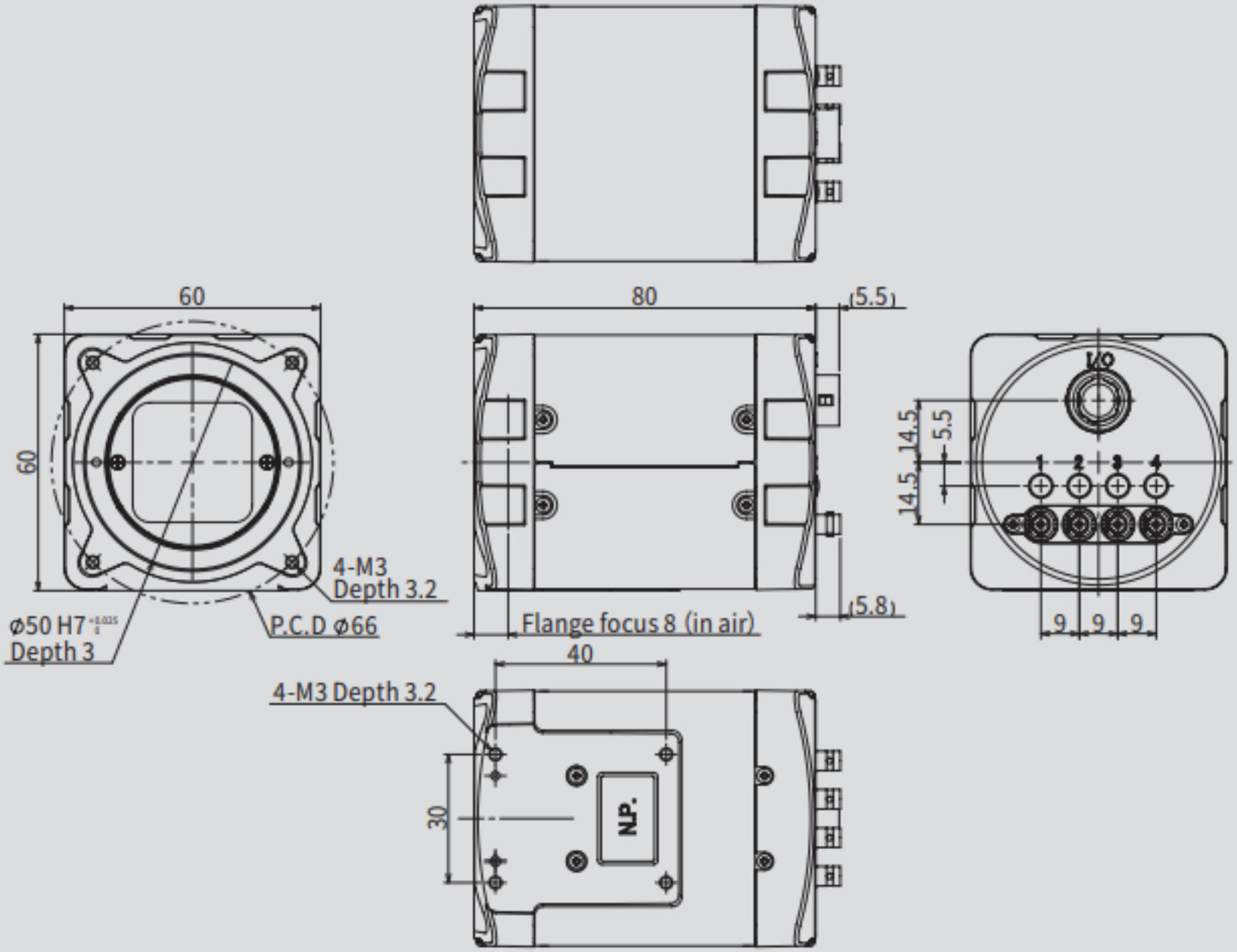
60
60
4-M3
Depth 3.2
ϕ50 H7
Depth 3
P.C.D ϕ66
80
(5.5)
(5.8)
Flange focus 8 (in air)
40
4-M3 Depth 3.2
30
N.P.
14.5
5.5
14.5
1
2
3
4
9
9
9